FLEX+ High-Line with Under-run Guard

Installations Instructions

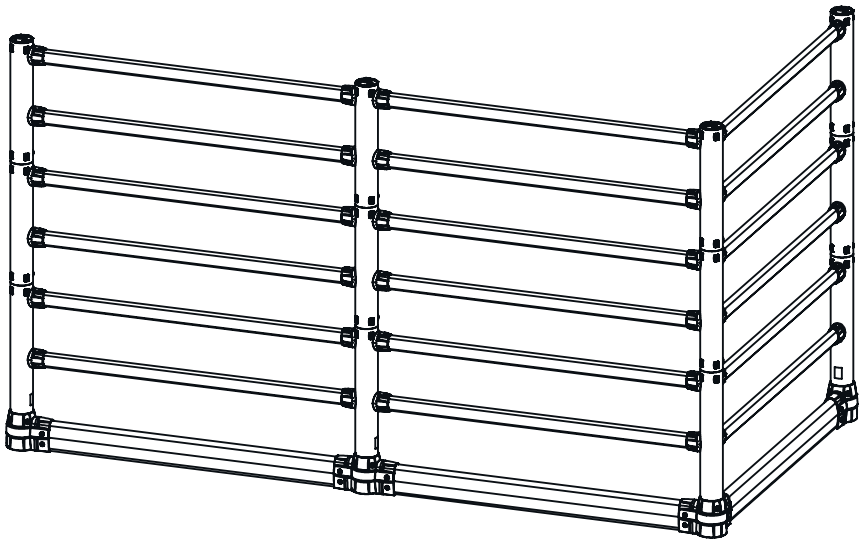

Components

Base start/end incl. fixing materials

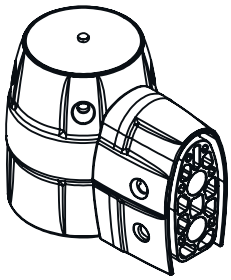

QTY: 1

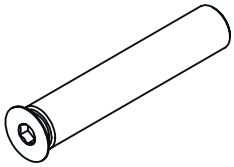

QTY: 2

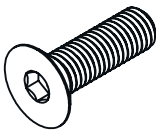

QTY: 6

QTY: 4

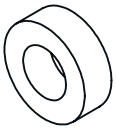

QTY: 4

Base centre incl. fixing materials

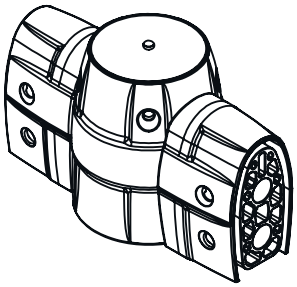

QTY: 1

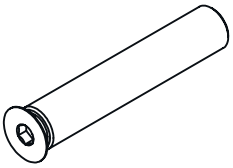

QTY: 4

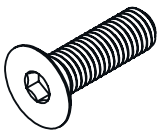

QTY: 8

QTY: 4

QTY: 4

Base corner incl. fixing materials

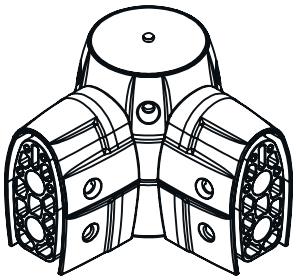

QTY: 1

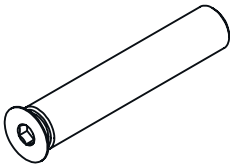

QTY: 4

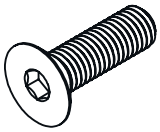

QTY: 8

QTY: 4

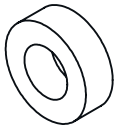

QTY: 4

Components

Base floor anchor

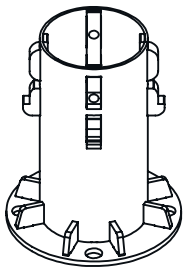

Cover cap incl. fixing materials

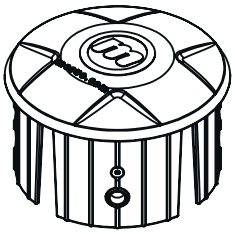

QTY: 1

QTY: 4

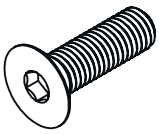

QTY: 4

S-Line Connector incl. fixing materials

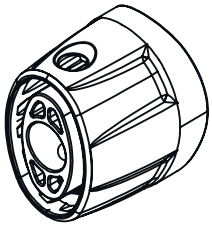

QTY: 1

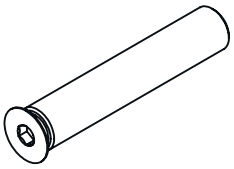

QTY: 1

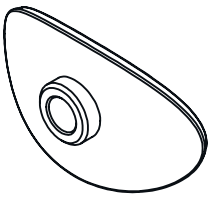

QTY: 1

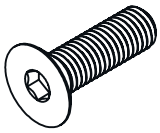

QTY: 1

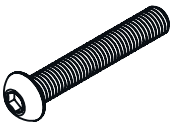

QTY: 1

QTY: 1

QTY: 1

Components

Post Extender

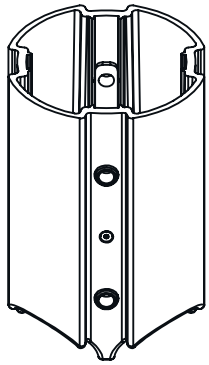

QTY: 1

QTY: 8

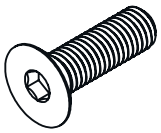

QTY: 8

Crossbar Under-run Guard

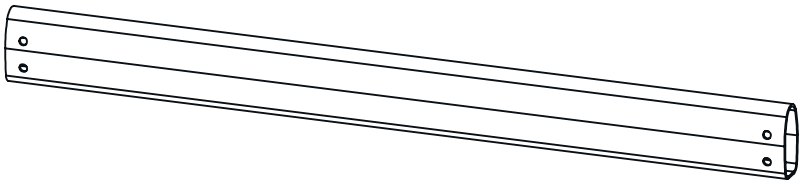

Crossbar High-Line

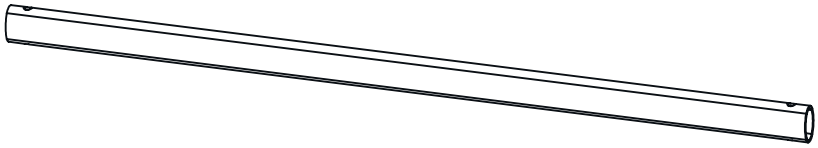

Components

Concrete anchors

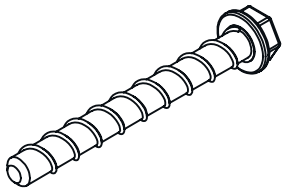

S-Line Post start/end | centre | corner

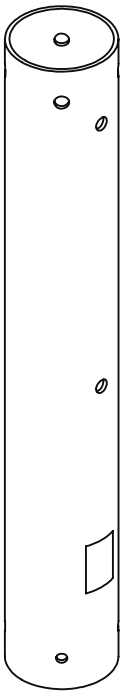

High-Line Post start/end | centre | corner

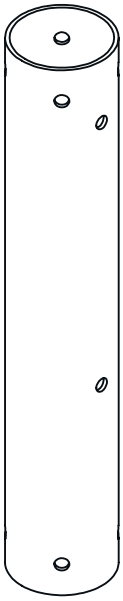

Required Tools

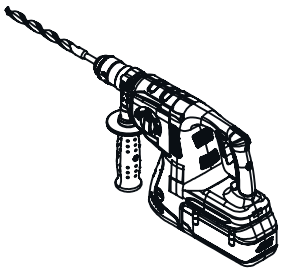

Hammer Drill With
∅12mm or ∅1/2in
Masonry Bit

Impact
Driver

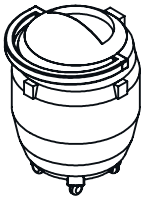

Vacuum

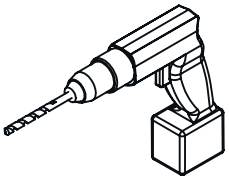

Drill with
∅20mm [3/4in] Bit

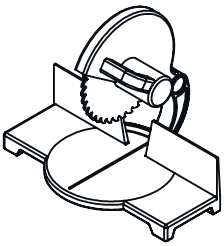

Mitre Saw

Hex Key
8mm [5/16in]

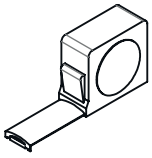

Measuring Tape

Socket Extender

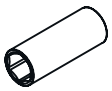

Hex Socket
17mm [3/4in]

Hex Bit
8mm [5/16in]

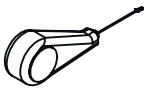

Chalk Line

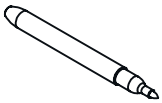

Marker

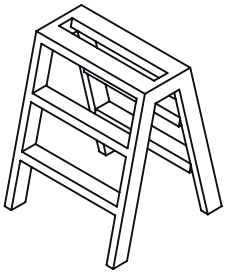

Step Ladder

PPE recommended: High Visibilty Vest, Steel Toe Boots, Work Gloves, Ear Protection, Dust Mask, Eye Protection.

Step 1

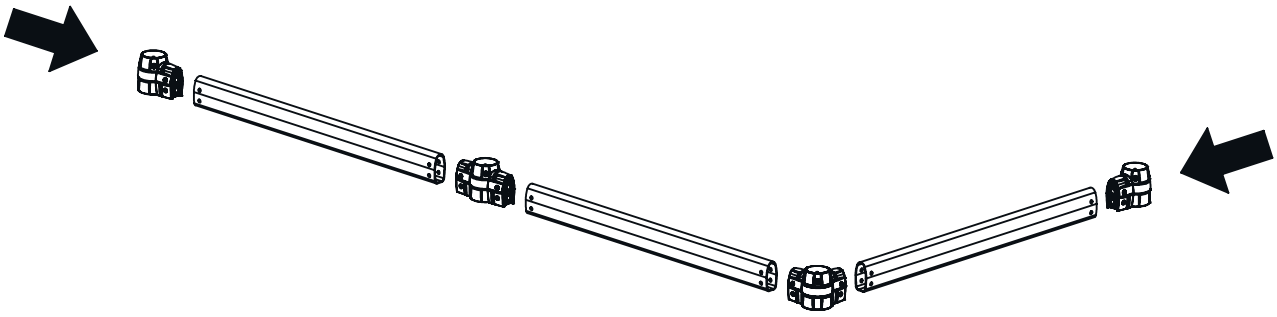

Step 2

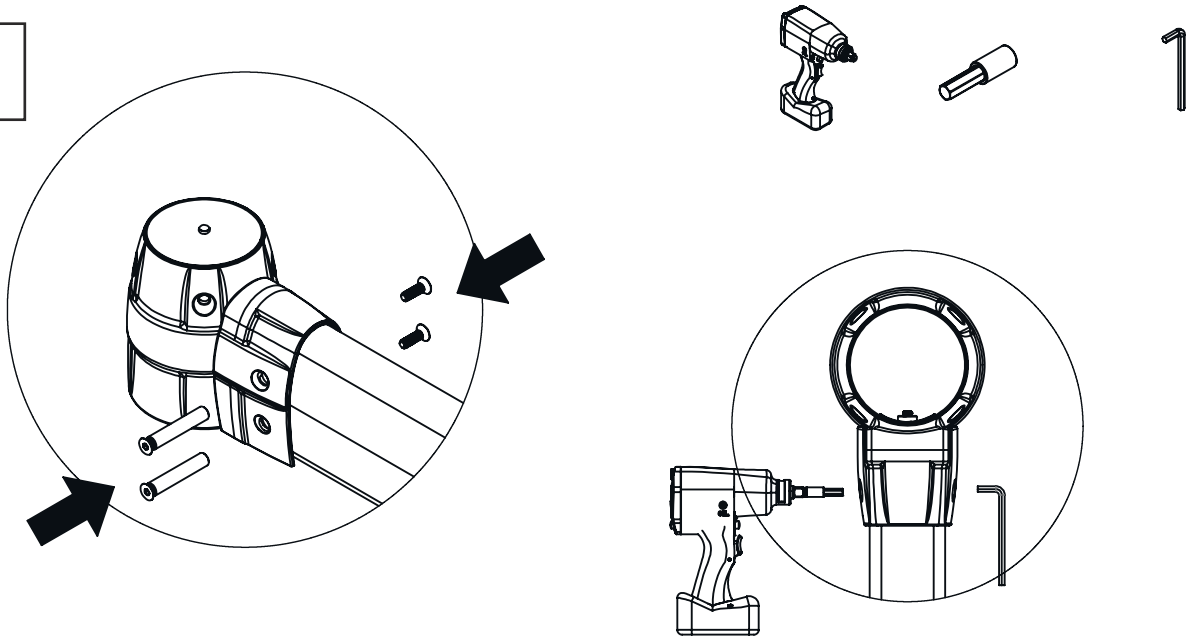

Step 3

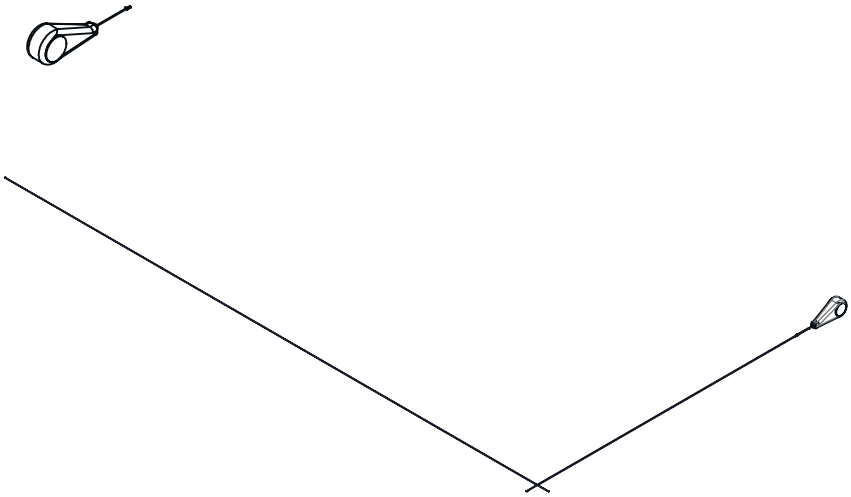

Step 4

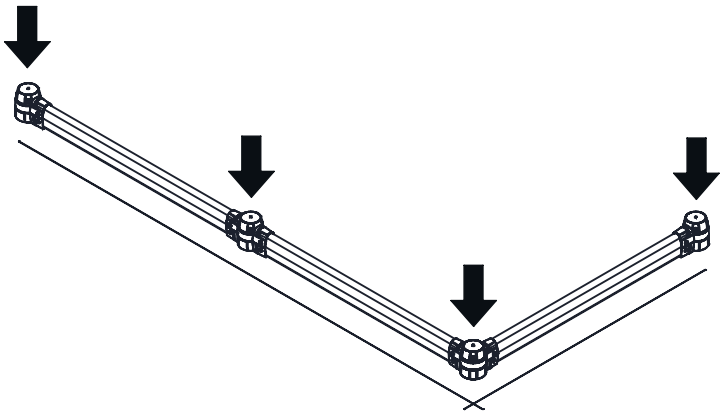

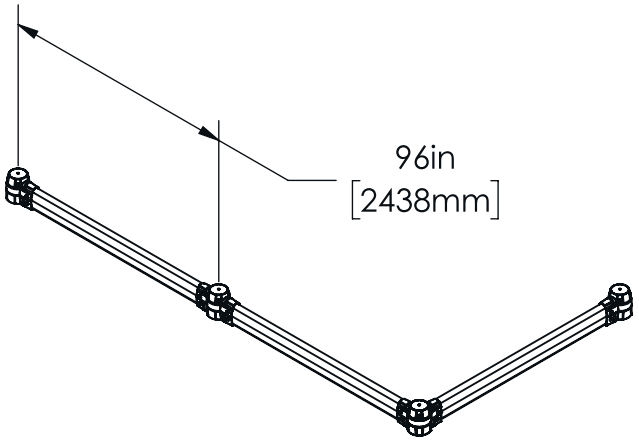

Step 5

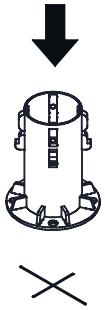

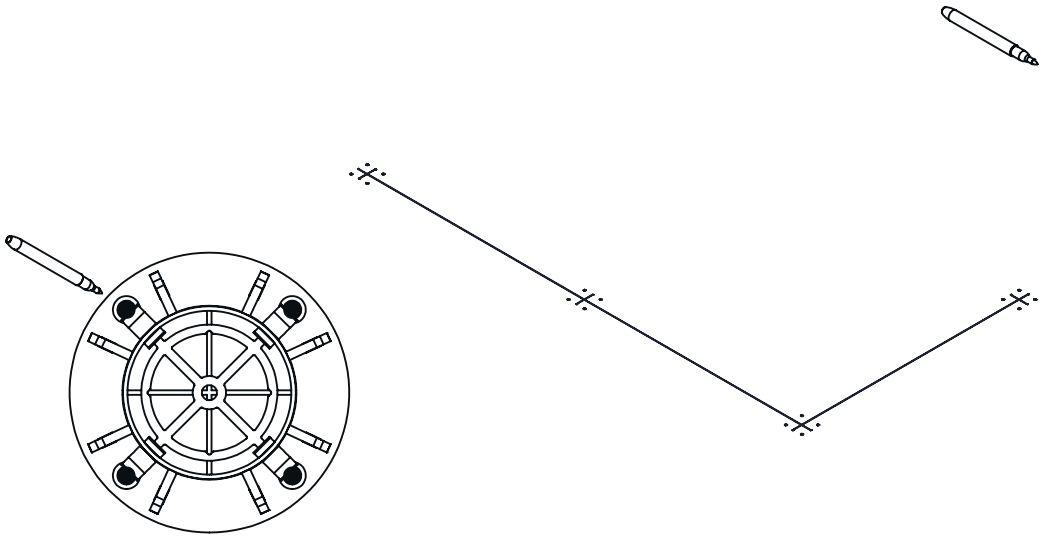

Step 6

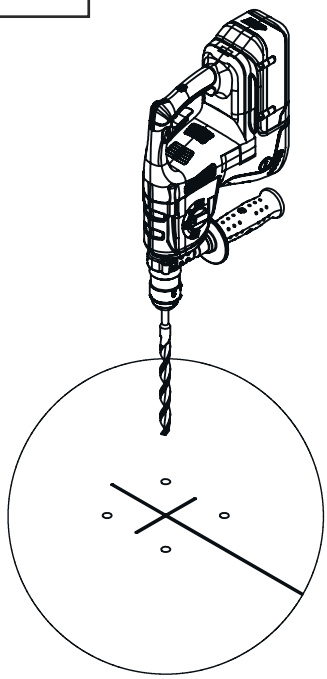

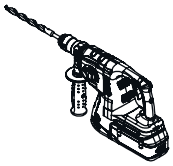

Anchor detail

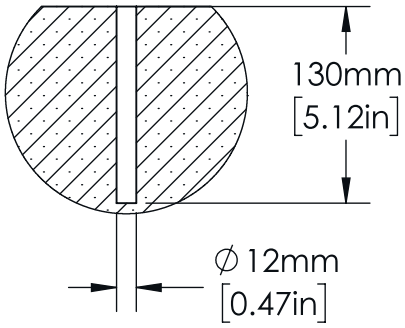

- **PPE recommended: High Visibilty Vest, Steel Toe Boots, Work Gloves, Ear Protection, Dust Mask, Eye Protection.**
- **Clean concrete dust by running the vacuum during drilling.**

Step 7

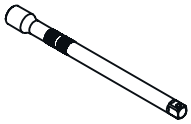

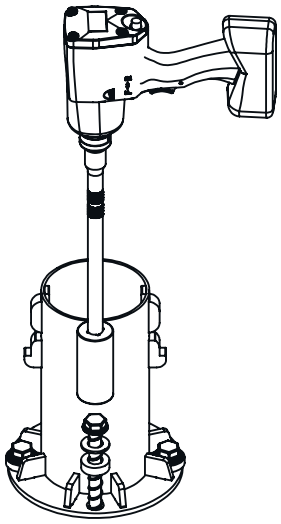

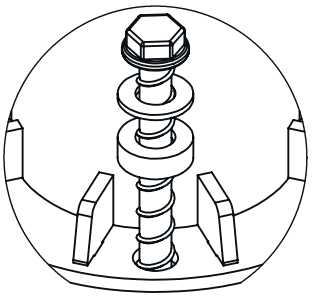

Anchor detail

Step 8

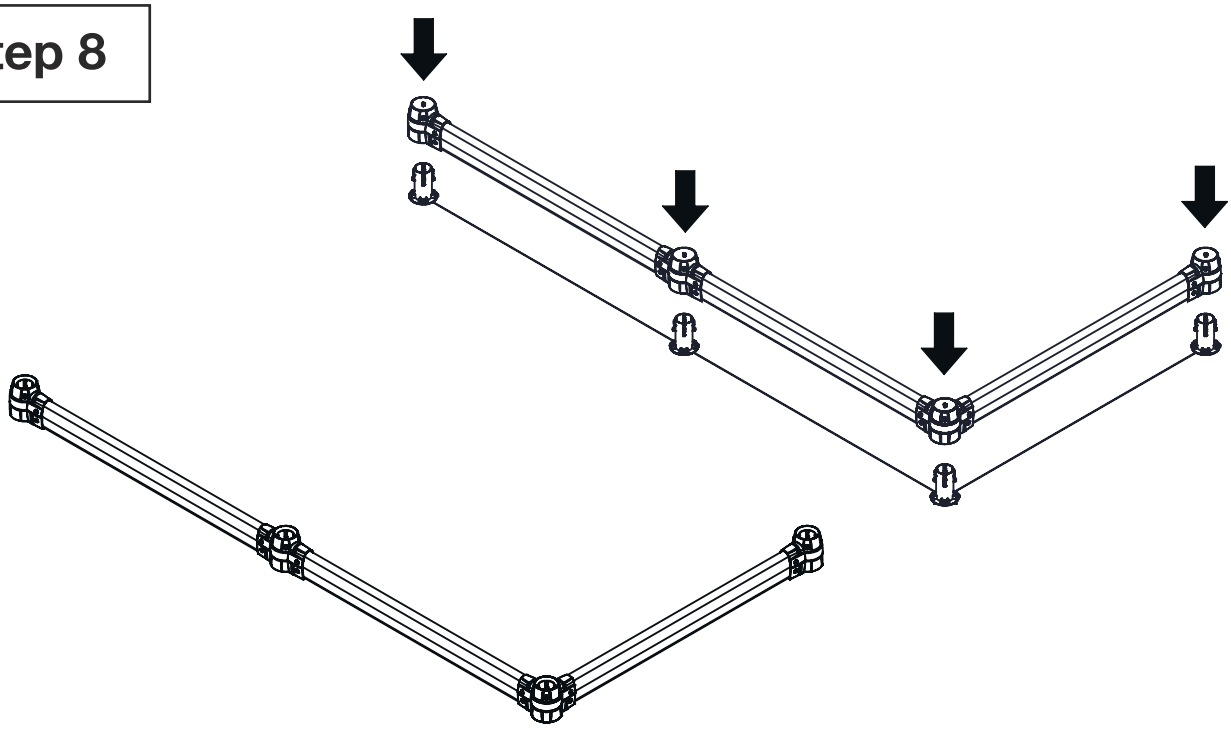

Step 9

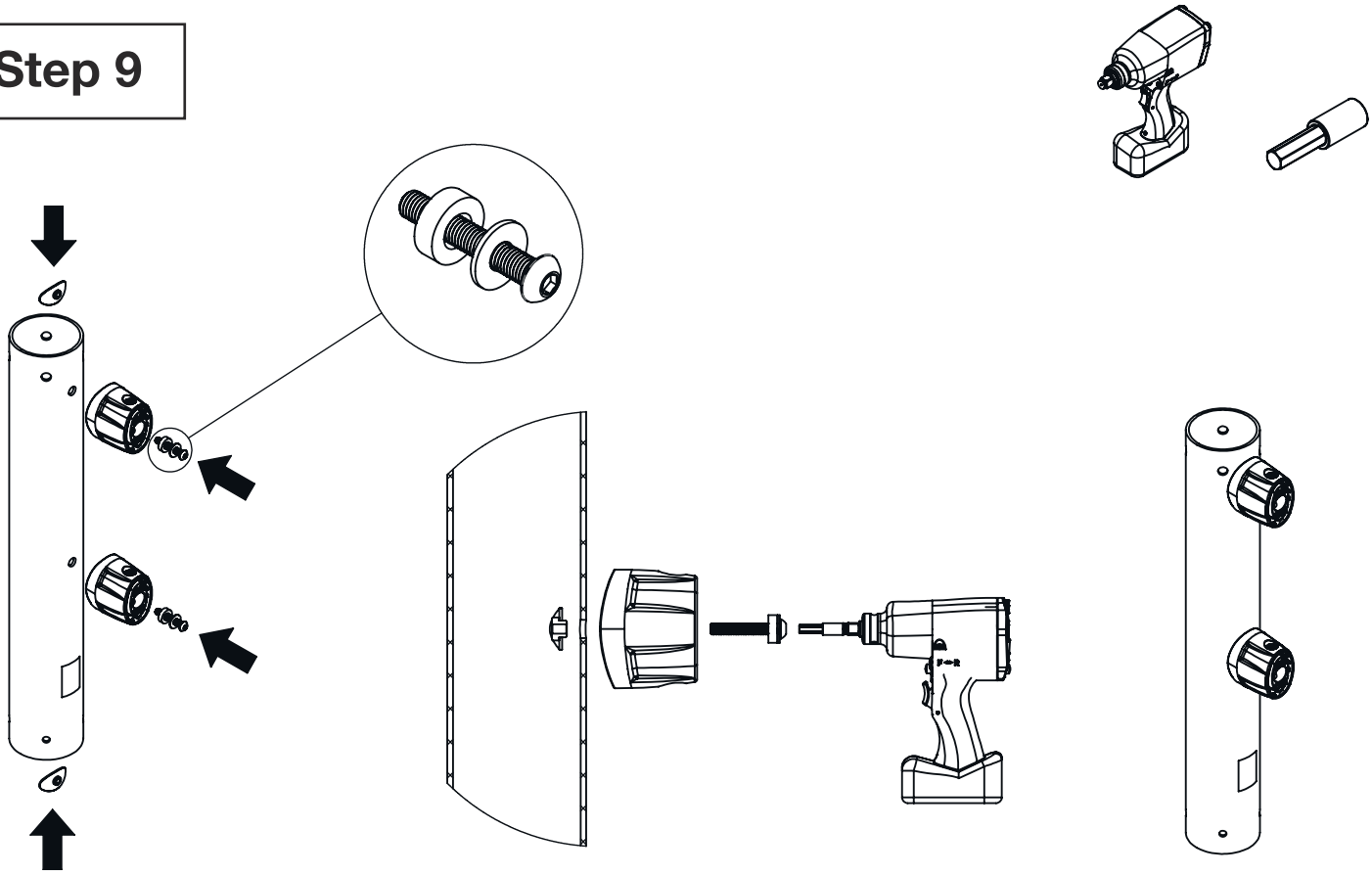

REPEAT FOR ALL POSTS

Step 10

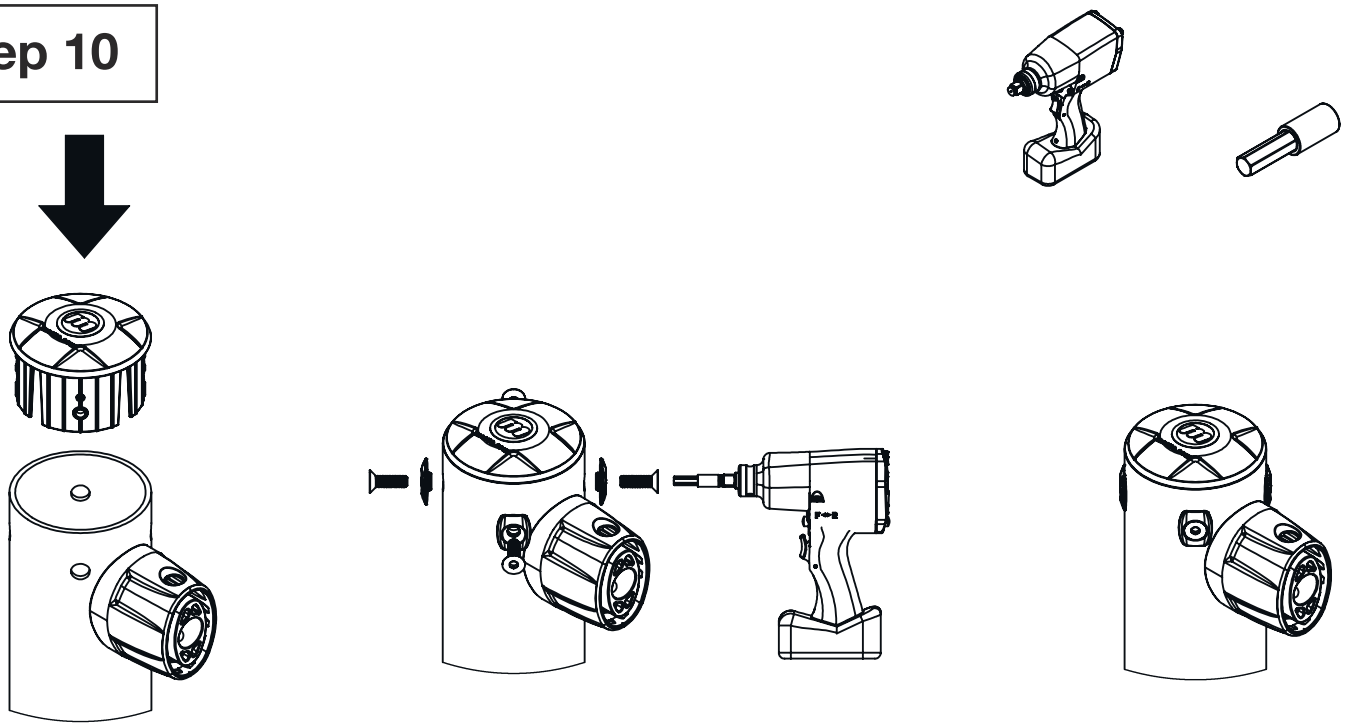

Repeat for 1 High-Line Post per Kit

Step 11

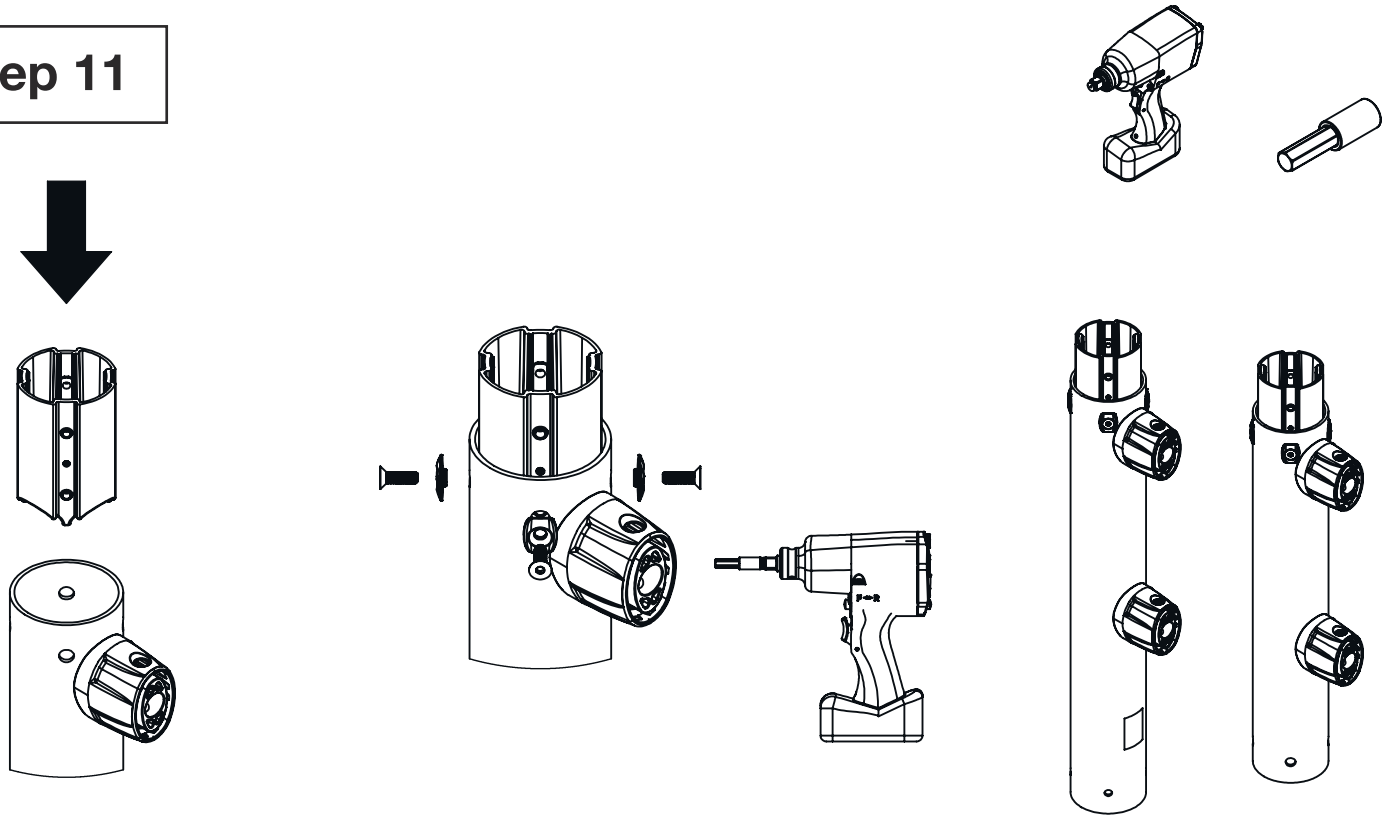

Repeat for 1 S-Line Post
and 1 High-Line Post per Kit

Step 12

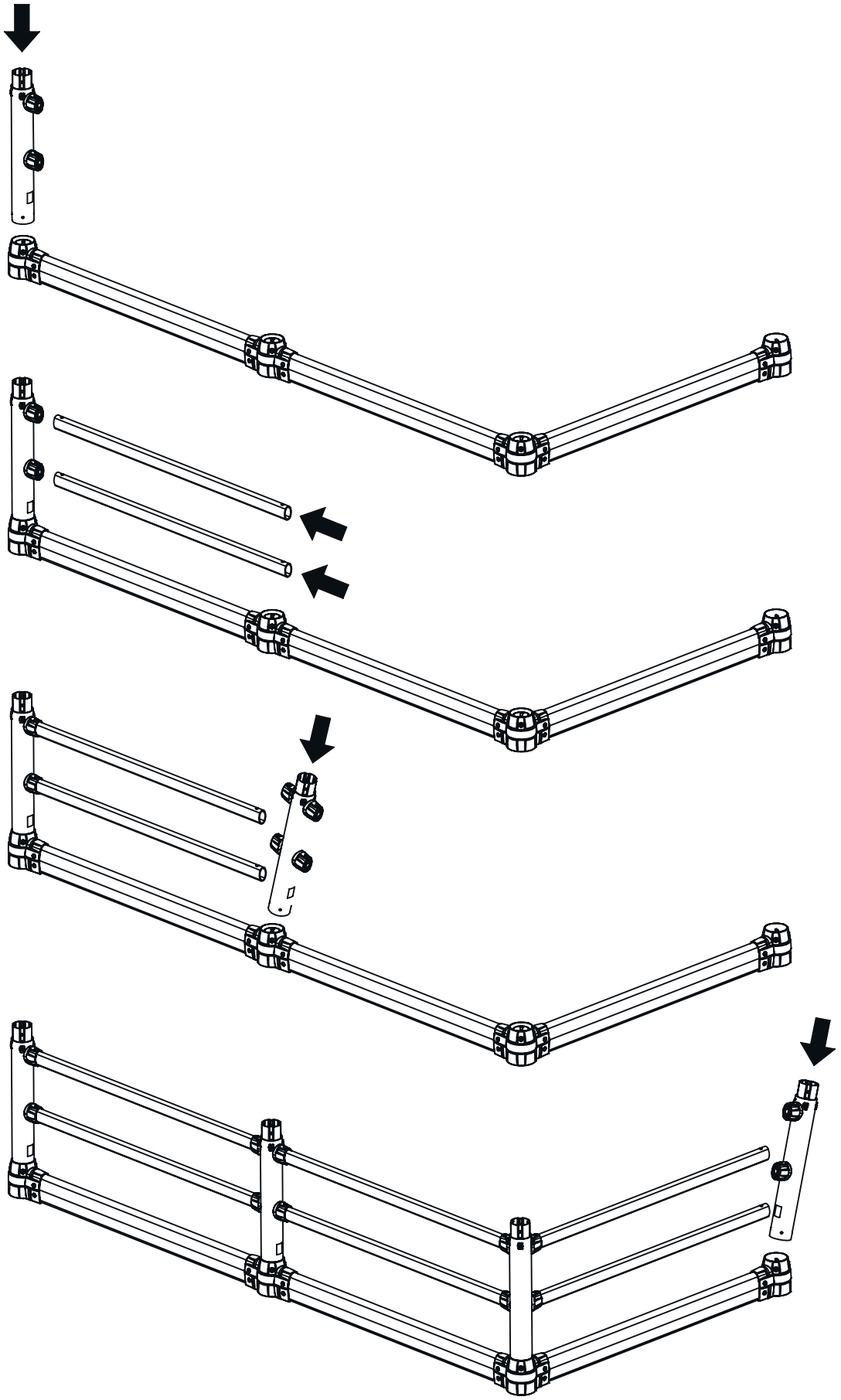

Step 13

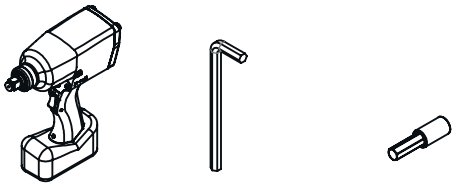

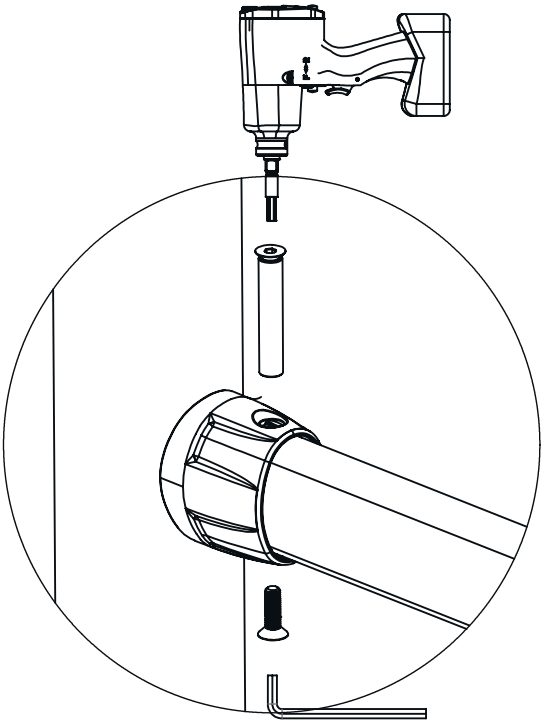

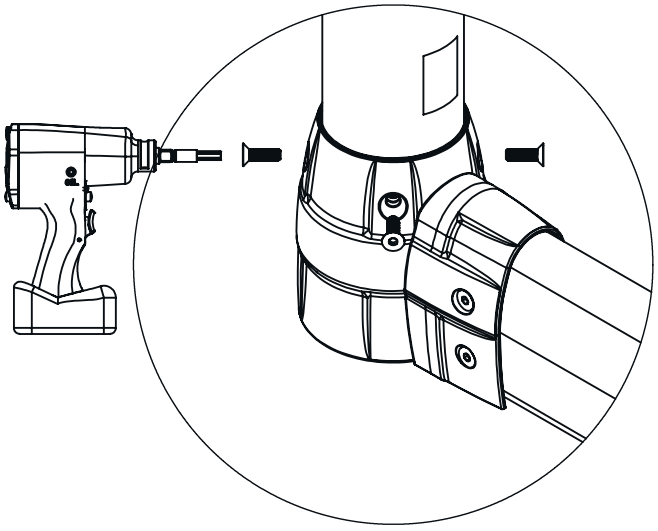

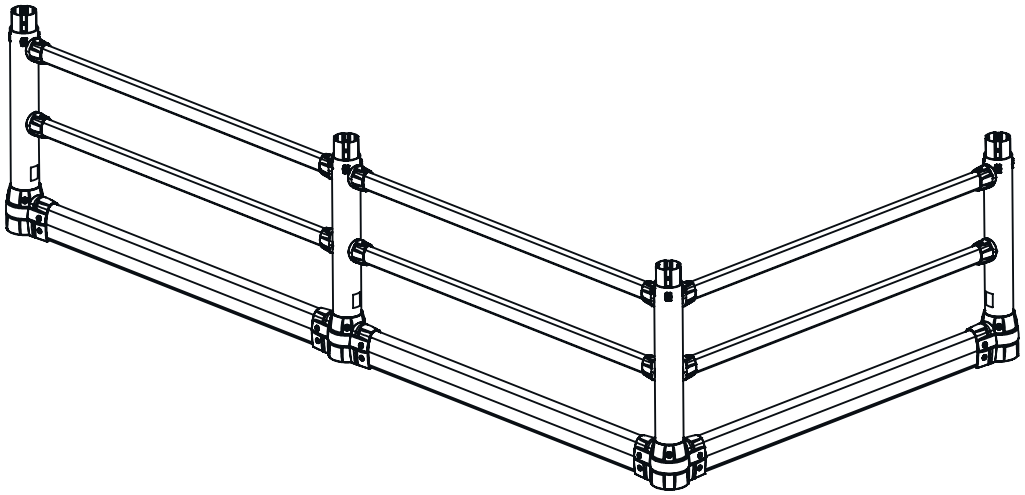

Repeat for all Posts and Rails

Step 14

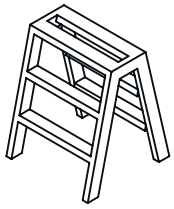

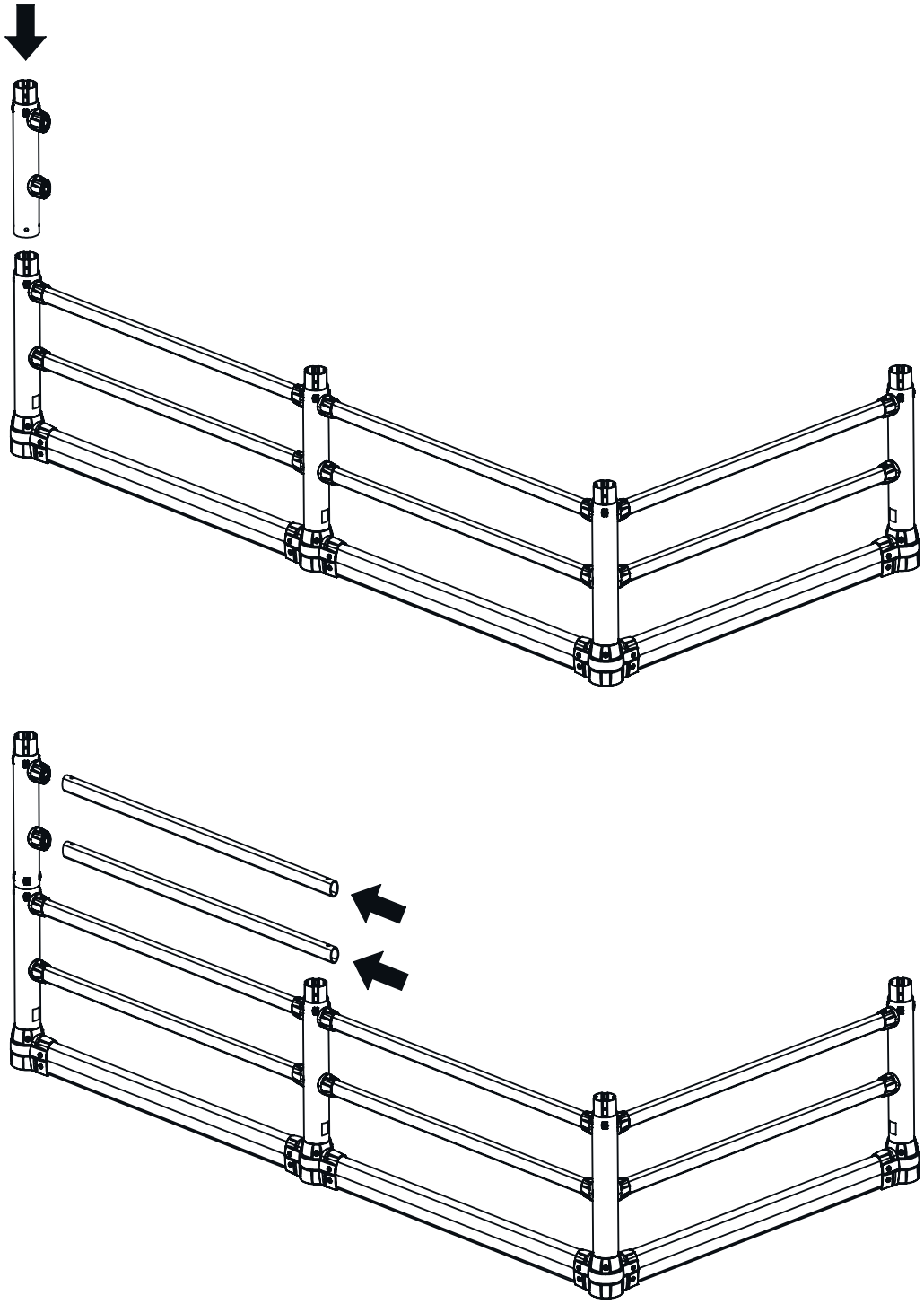

Step 14 (cont.)

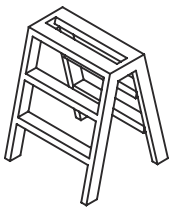

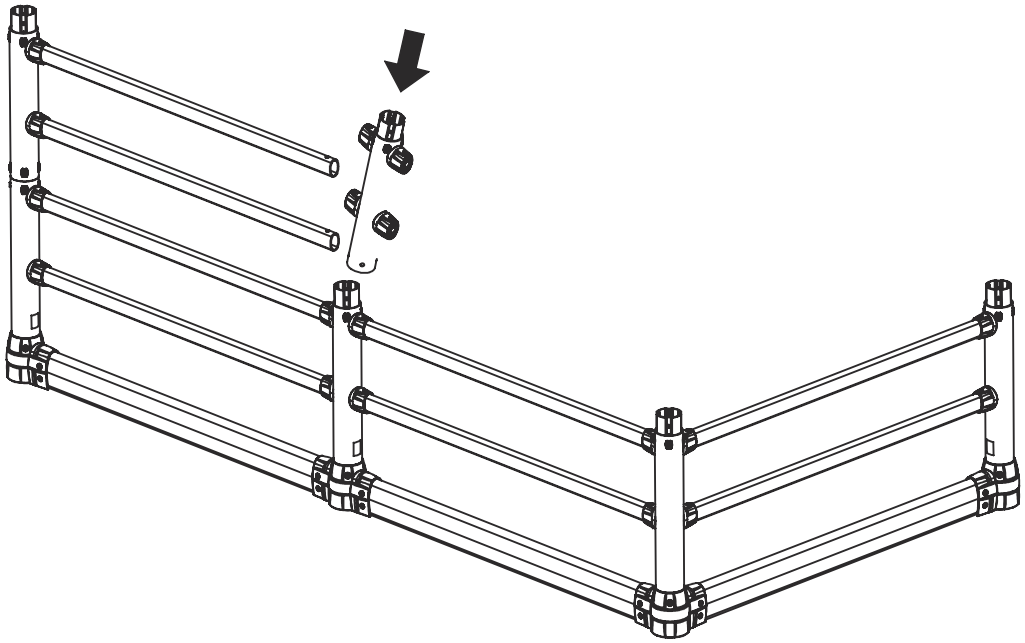

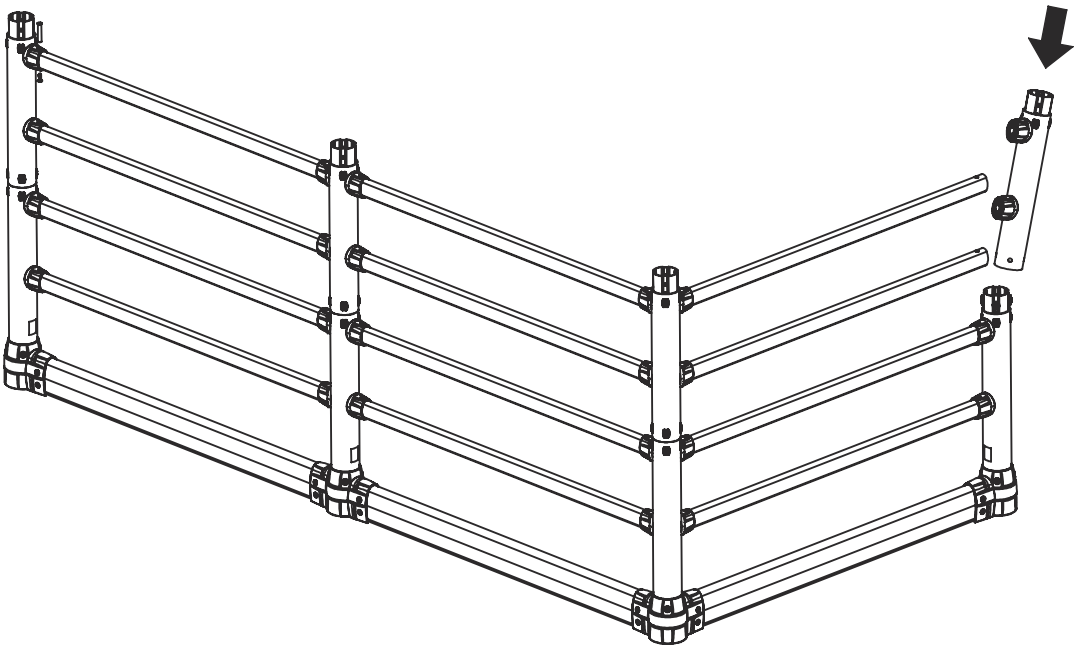

Step 15

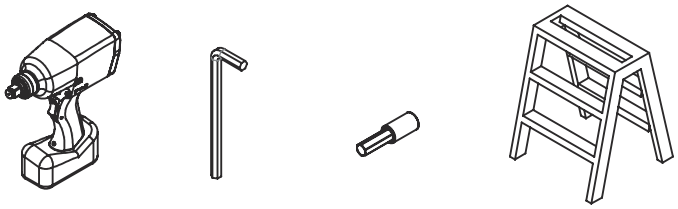

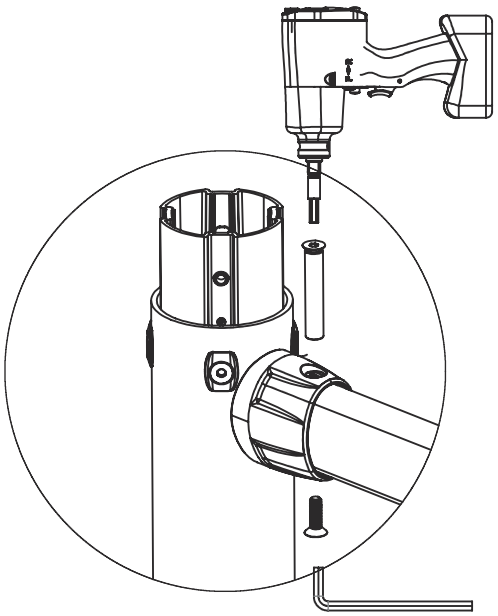

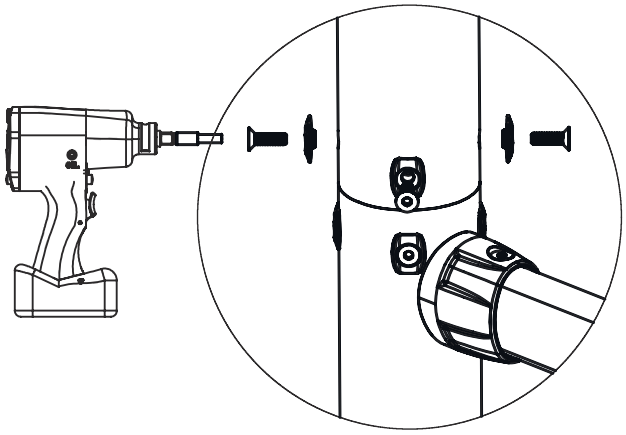

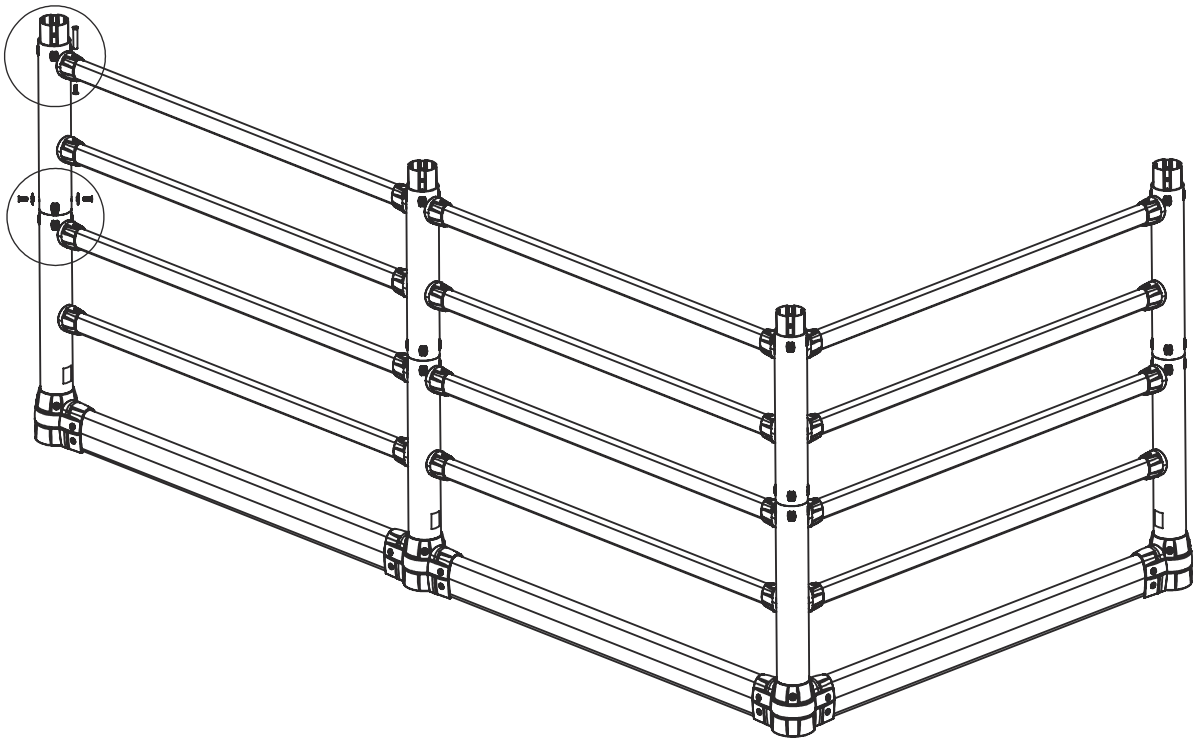

Repeat for all post and rails

Step 16

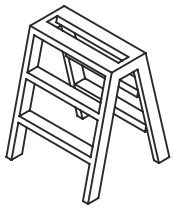

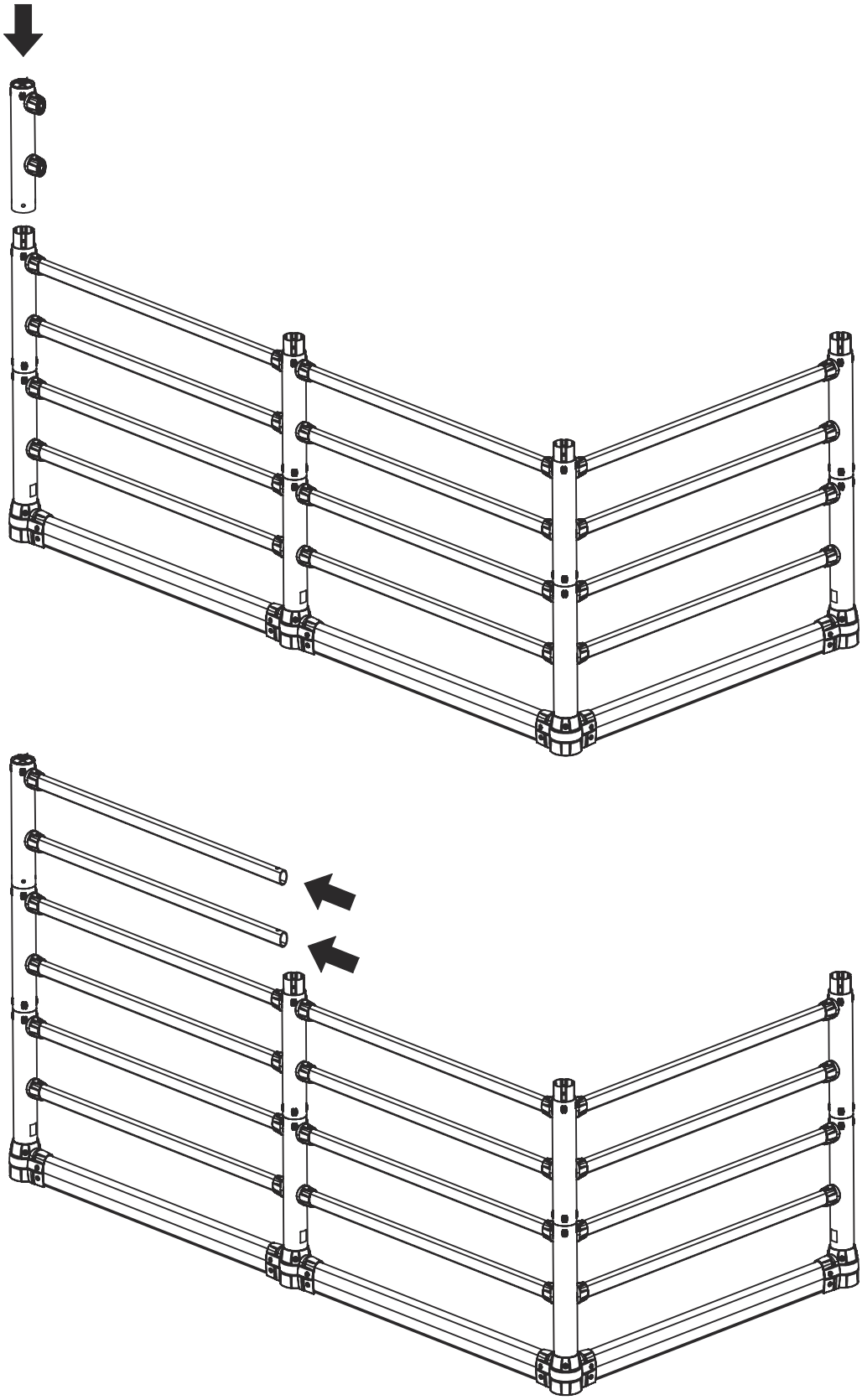

Step 16 (cont.)

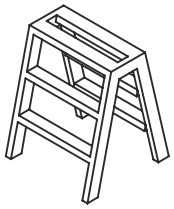

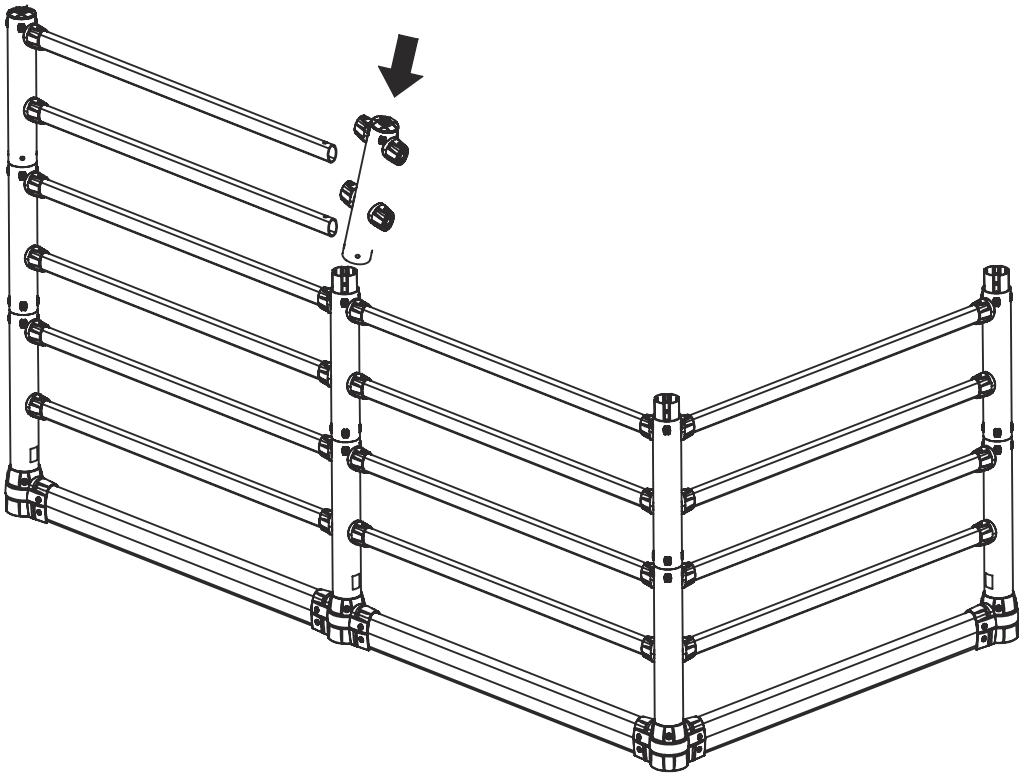

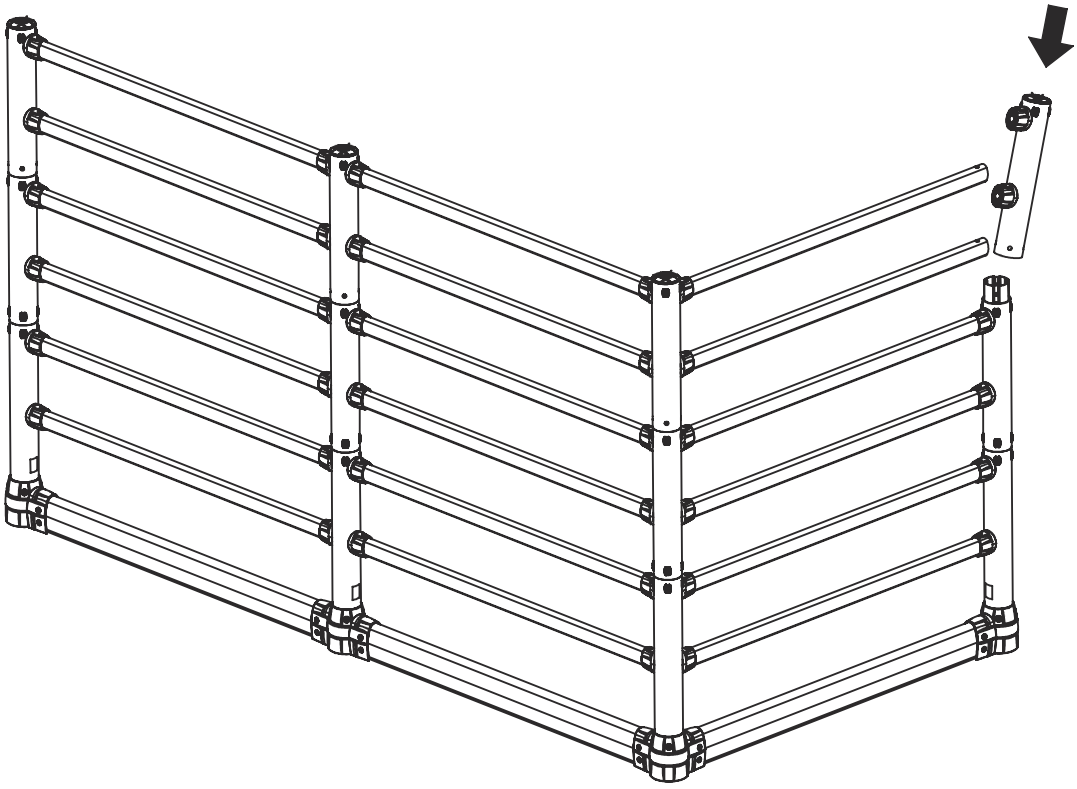

Step 17

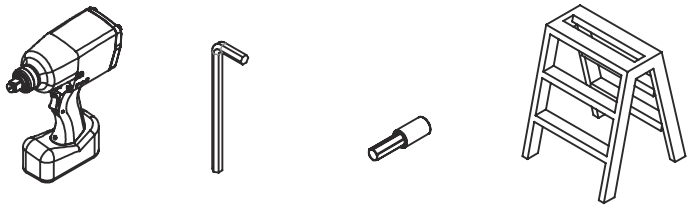

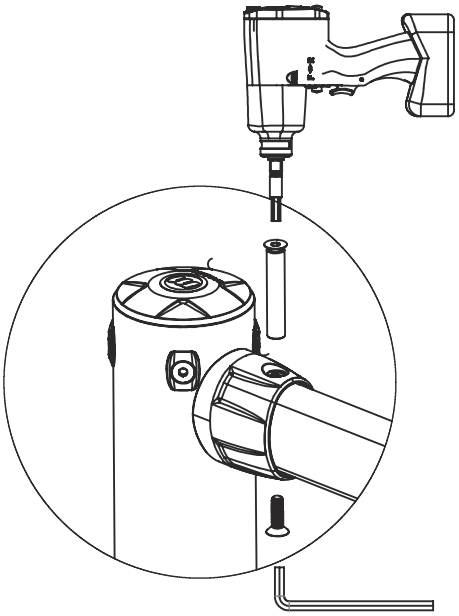

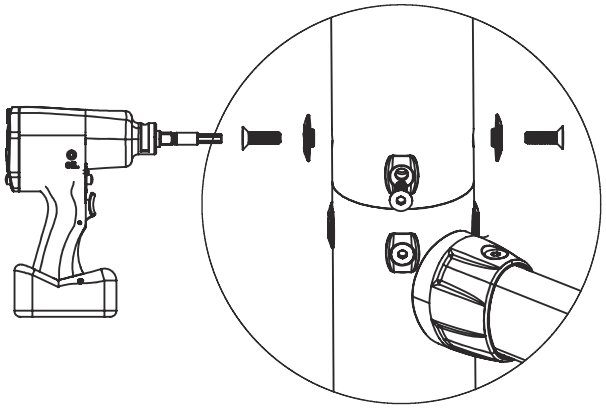

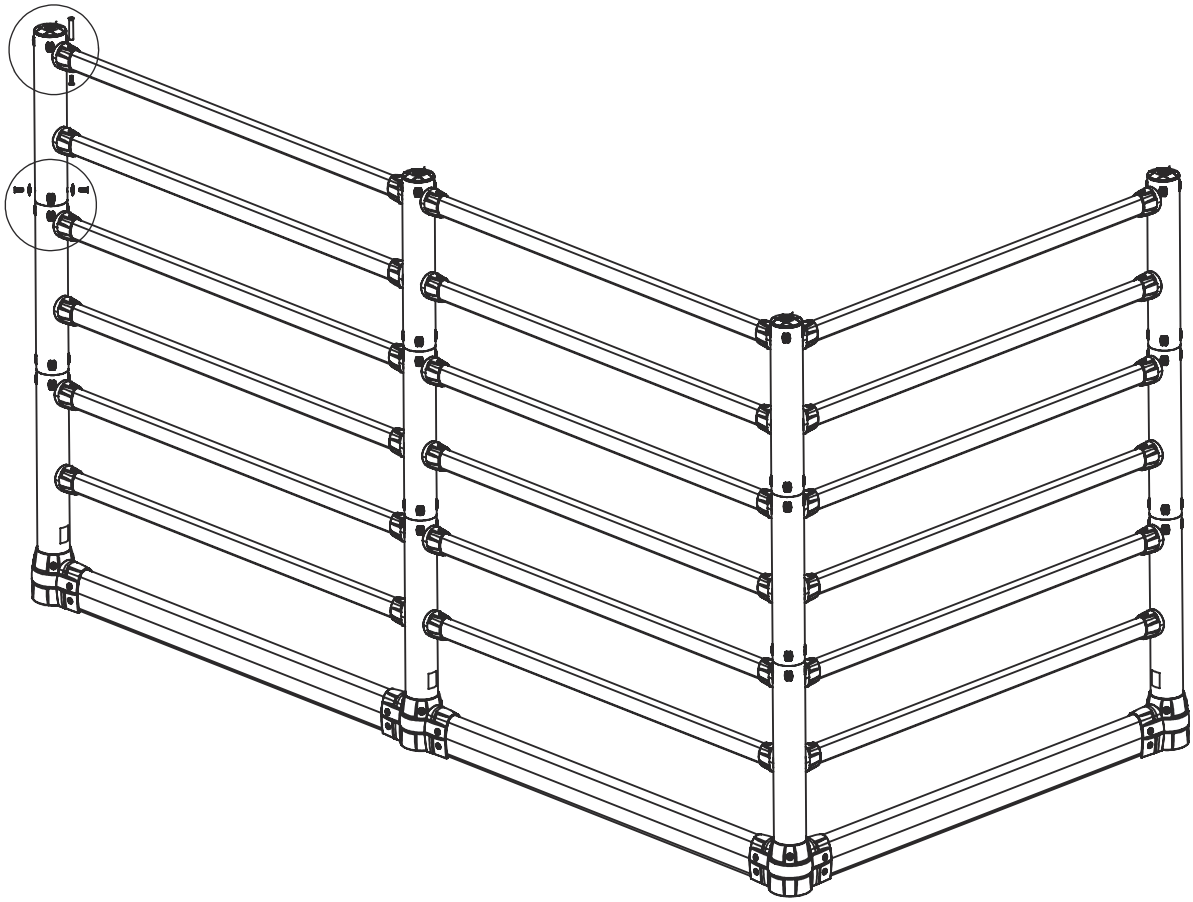

Repeat for all post and rails

Appendix A: Custom Length Rails

Step A1

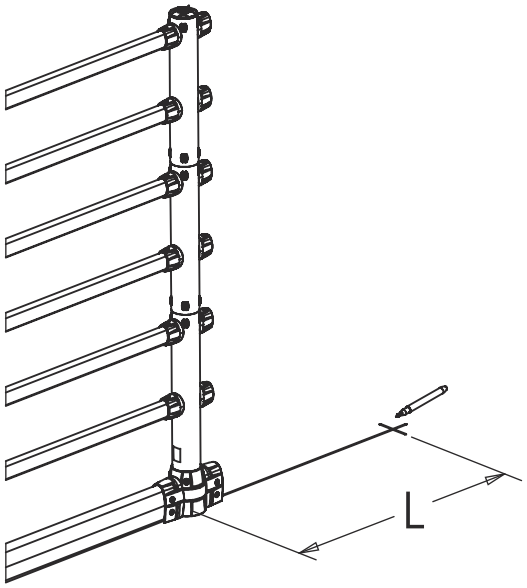

Step A2

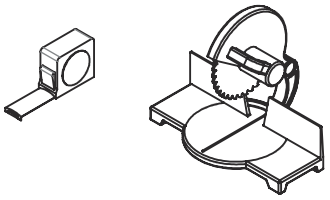

Crossbar Under-run Guard

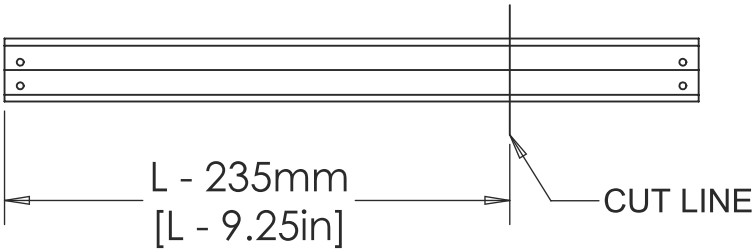

Crossbar High-Line

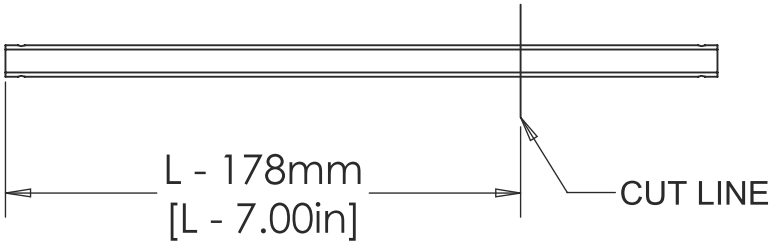

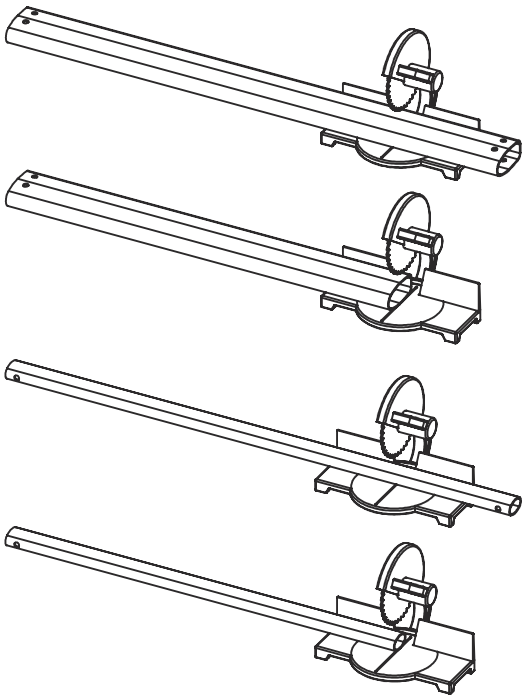

Step A3

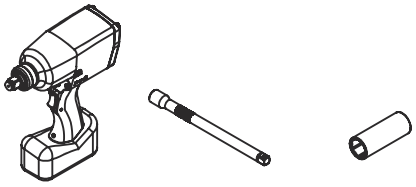

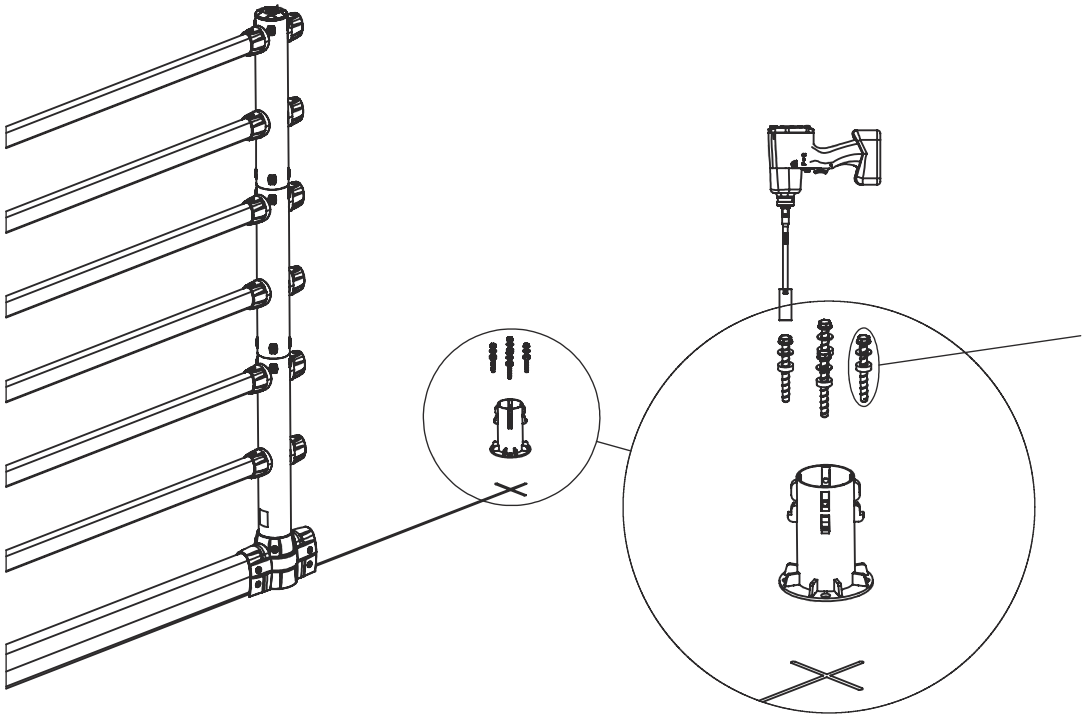

Step A4

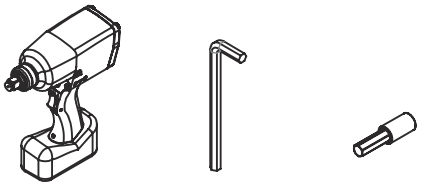

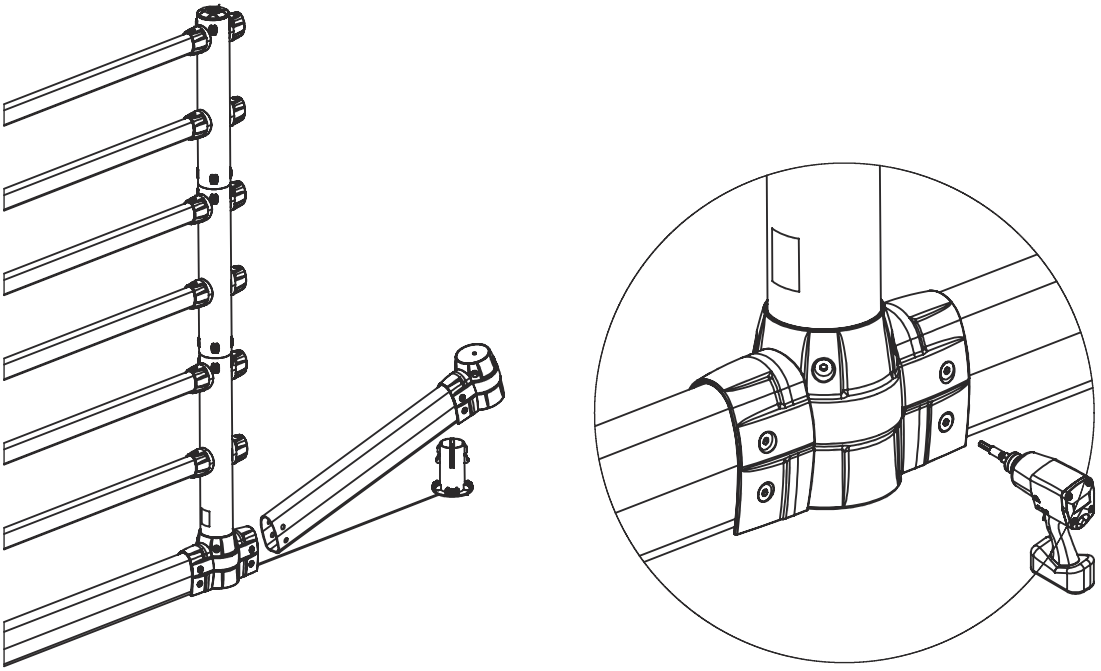

Step A5

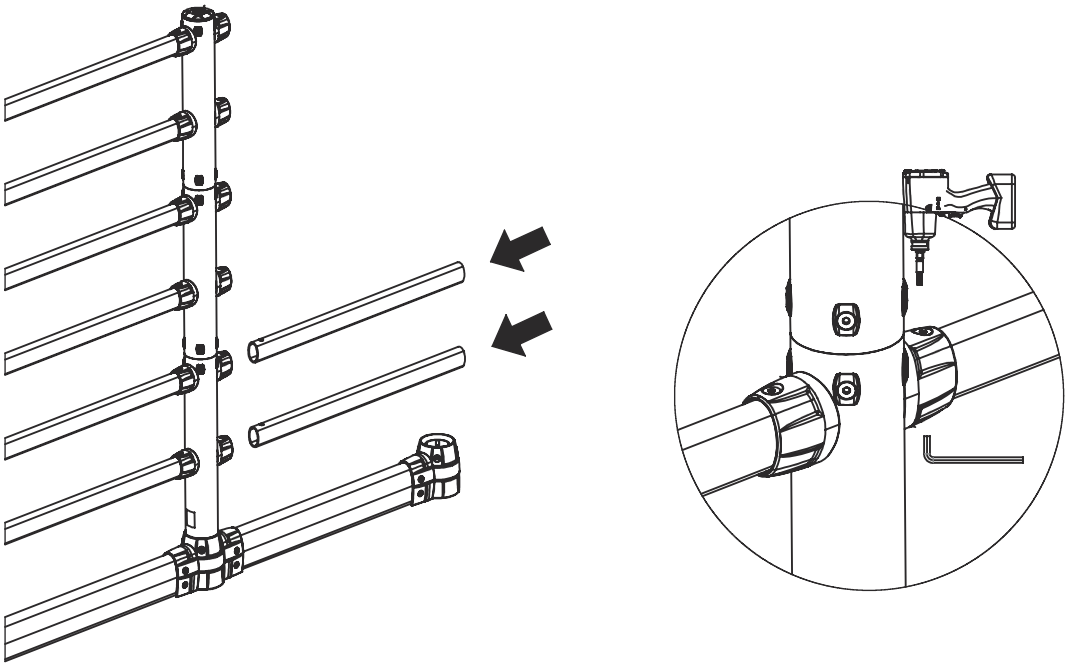

Step A6

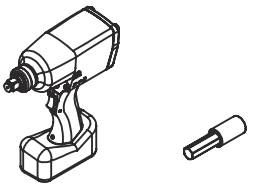

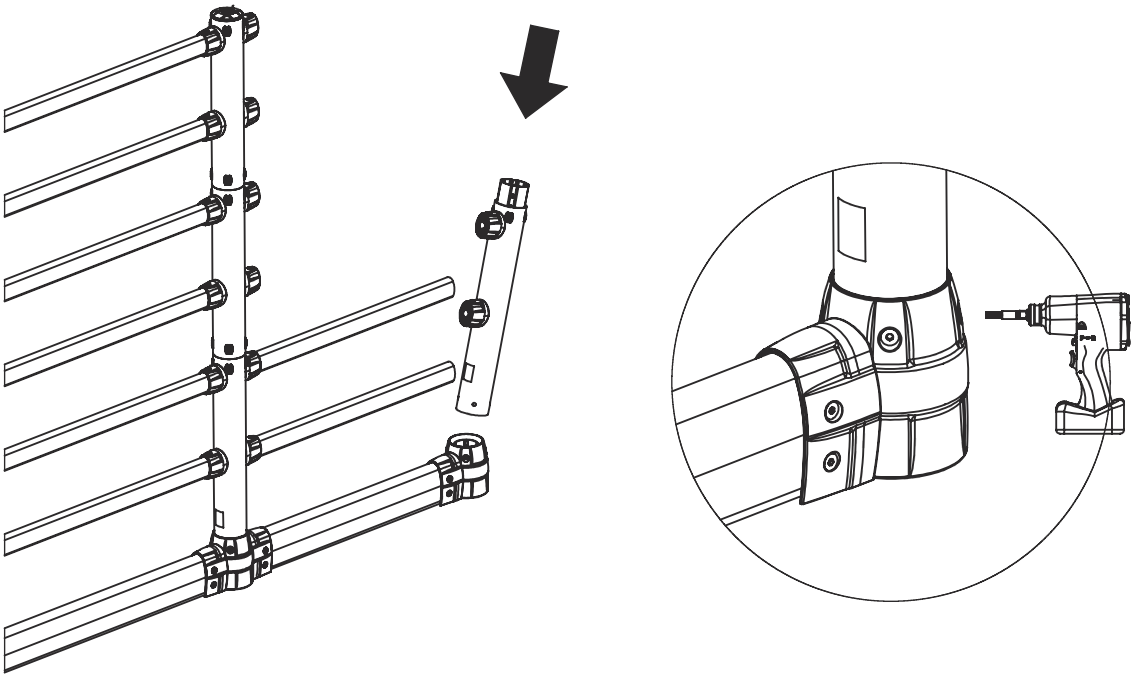

Step A7

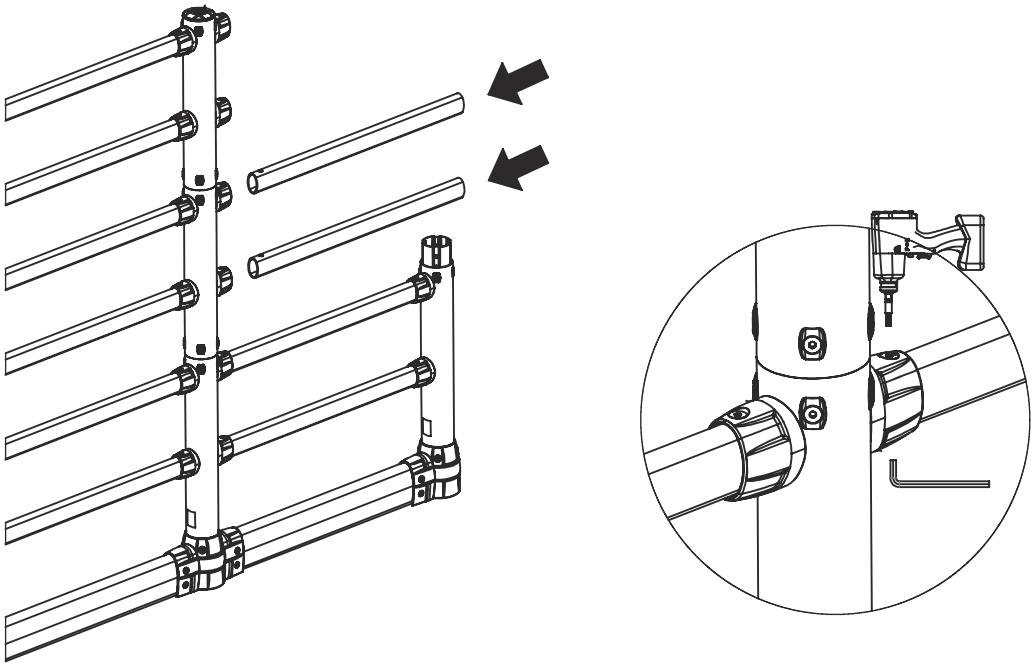

Step A8

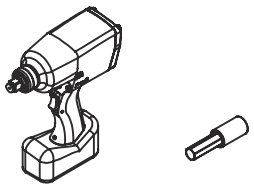

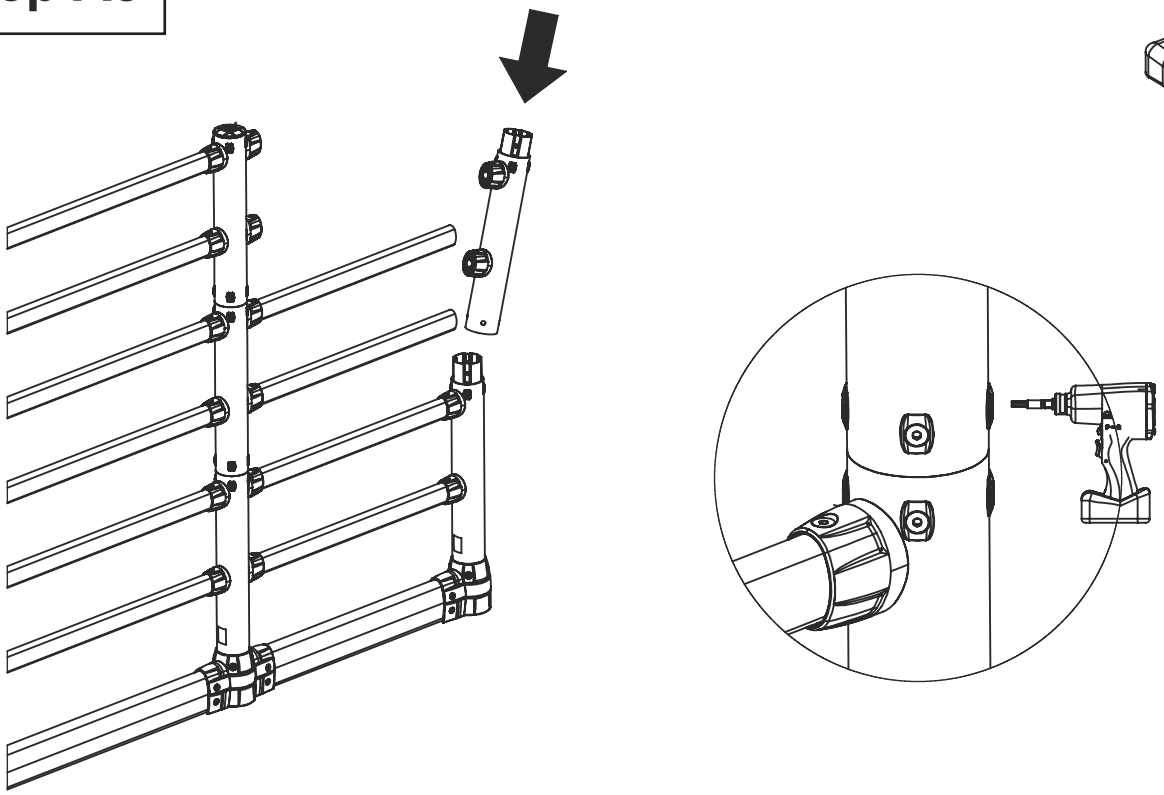

Step A9

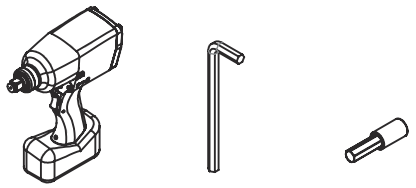

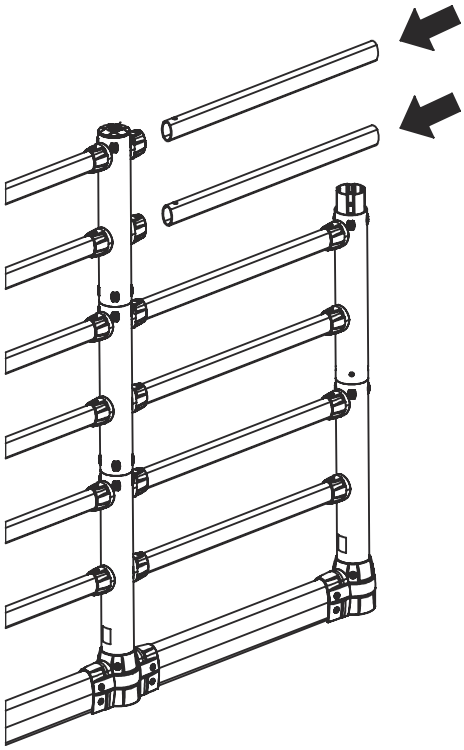

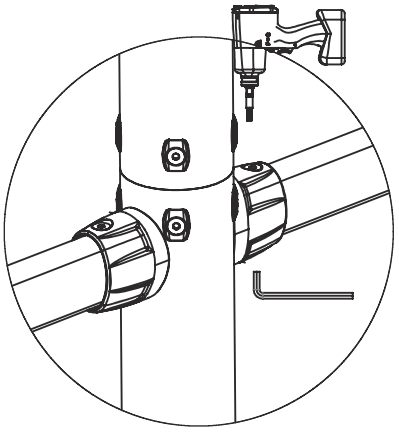

Step A10

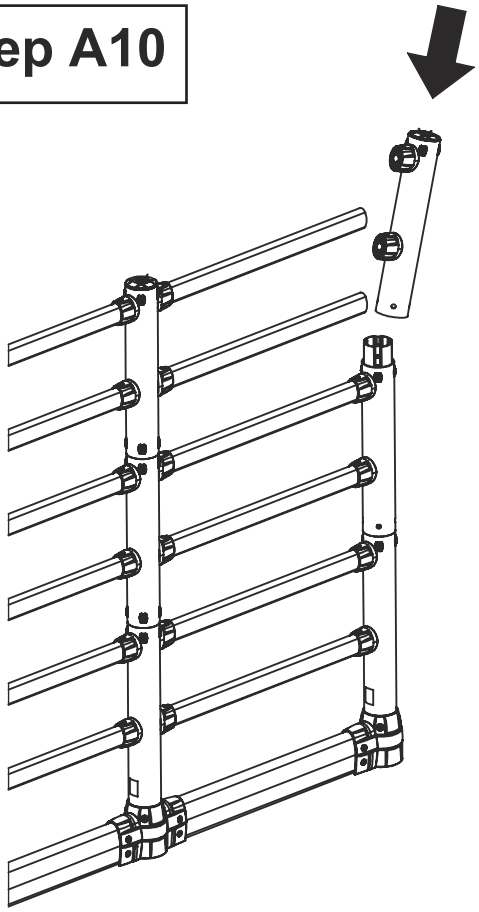

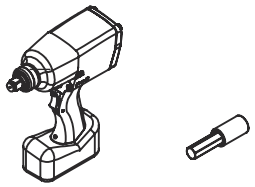

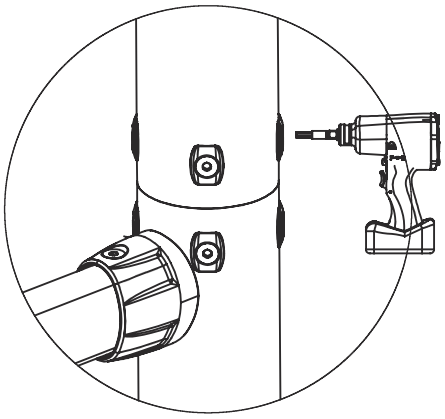

Step A11

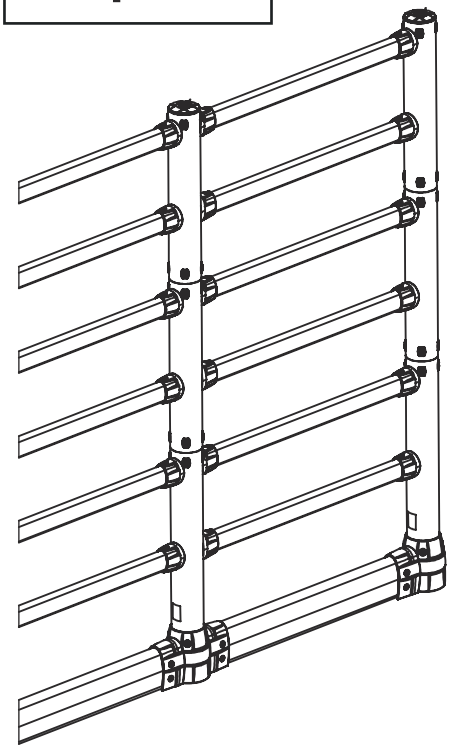

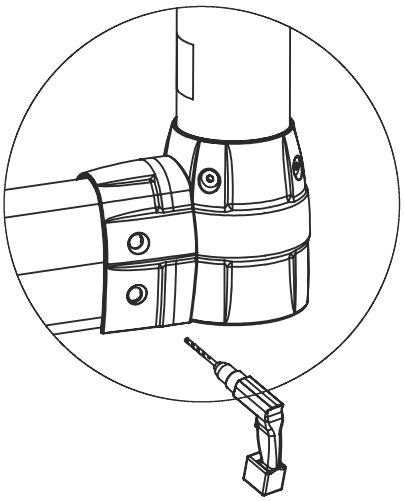

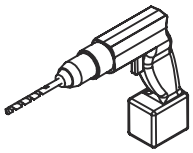

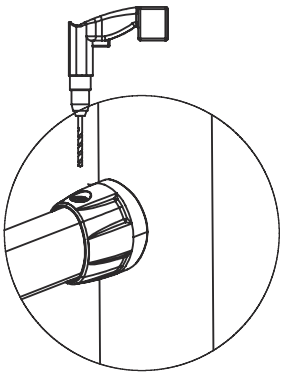

Repeat as needed

Step A12

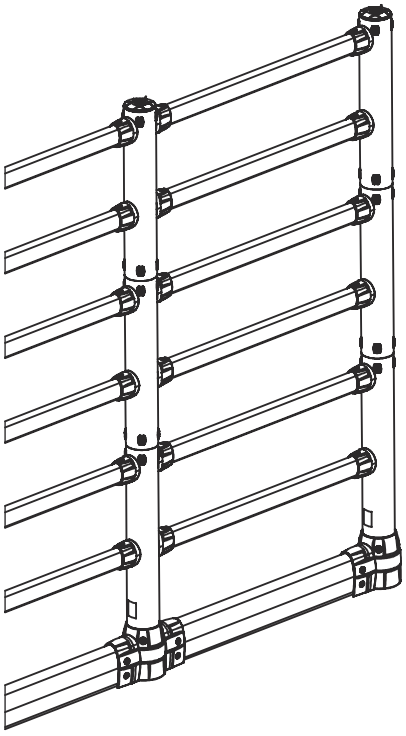

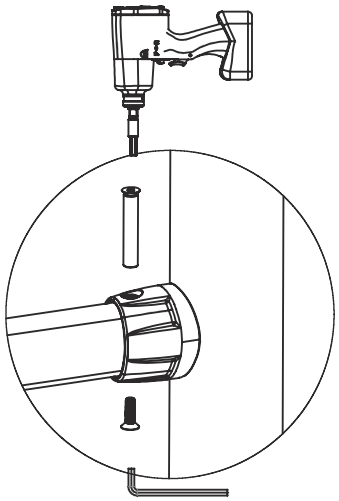

Repeat for all remaining connectors
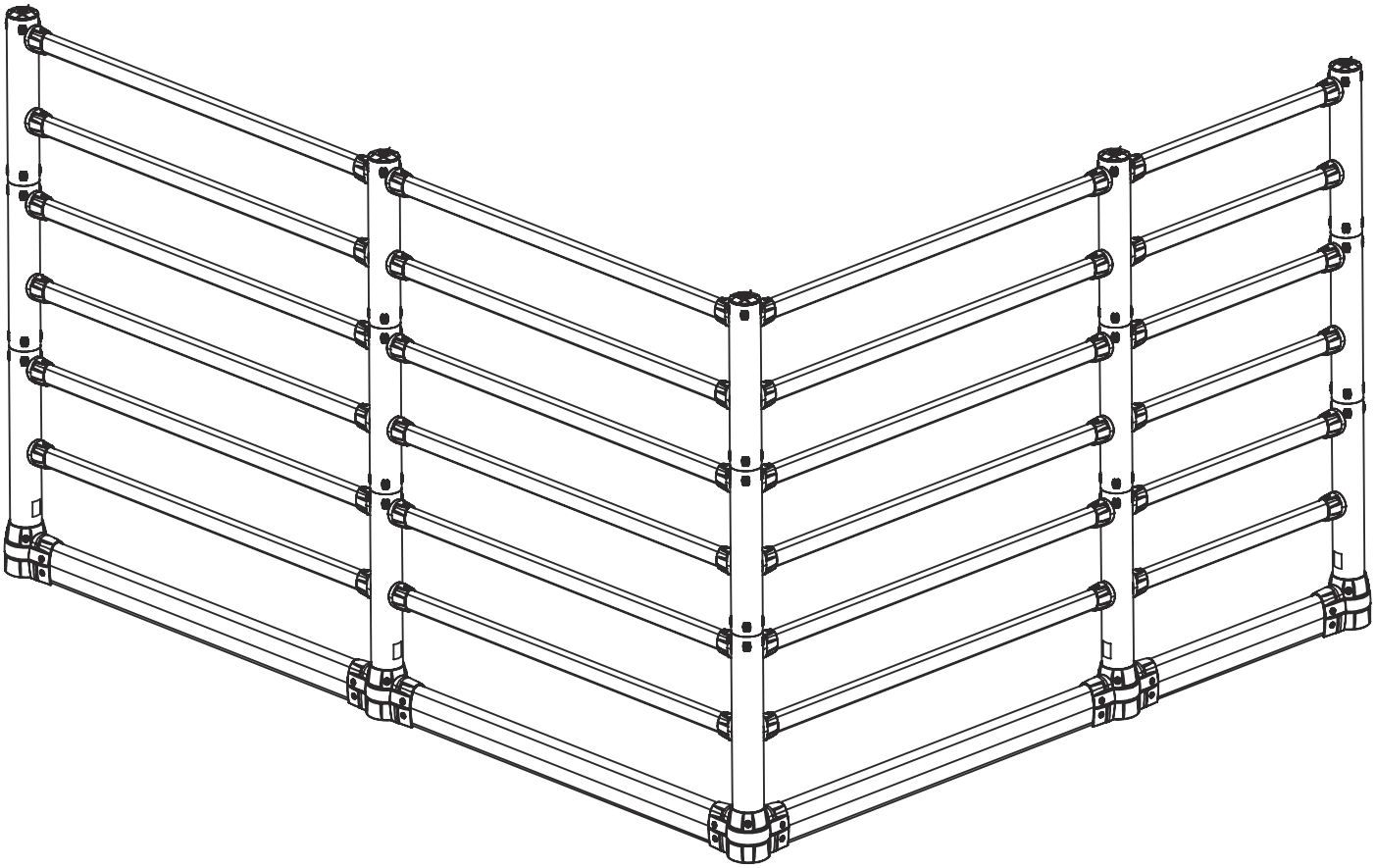
Installation Complete